RGB24 Strip Controller
RGB DCSSR

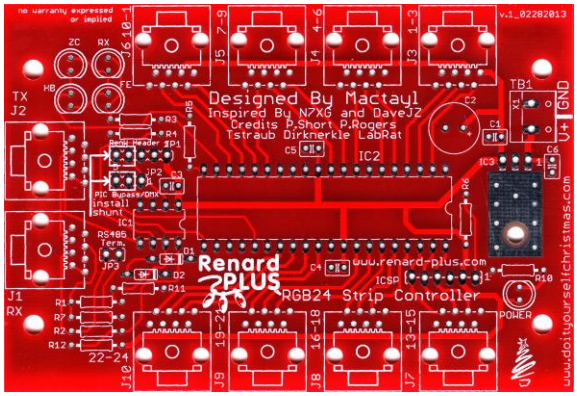

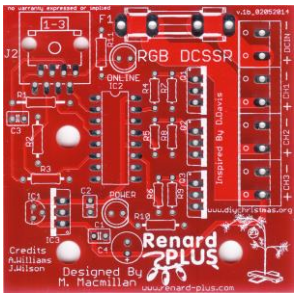

Aug 2016

RGB24 Board Version 1.00
DCSSR Board Version 1.00
Document Rev 2.30

Renard-Plus, Salem, Oregon 97302
© 2011-2016 Renard Plus. All rights reserved.
Published 2016
Printed in United States

Renard-Plus ("Developer") has made every effort to ensure the accuracy of this document. Developer makes no warranties with respect to this documentation and disclaims any implied warranties of merchantability and fitness for a particular purpose. The information in this document is subject to change without notice. Developer assumes no responsibility for any errors that may appear in this document.

The information contained herein is the exclusive and confidential property of Renard Plus, except as otherwise indicated.

We wish to also thank the Do It Yourself Community for the inspiration it has given us in the development of this product.

Trademarks the Renard Plus logo are trademarks of Renard Plus.

All other trademarks acknowledged.

Table of Contents

TABLE OF CONTENTS **2**

1. INTRODUCTION TO RENARD **3**

2. OVERVIEW OF RENARD PLUS RGB24 AND DCSSR **4**

3. ASSEMBLY INSTRUCTIONS **5**

3.1 BOMs 5
3.1.1 RGB24 Parts List *5*
3.1.2 DCSSR Parts List *6*
3.2 CONTROLLER BOARD ASSEMBLY 7
3.2.1 First things first *7*
3.3 RGB24 ASSEMBLY GUIDE 8
3.3.1 Install the resistors and Diodes *8*
3.3.2 Install IC sockets *10*
3.3.3 Install the capacitors *11*
3.3.4 Install the light emitting diodes *12*
3.3.5 Install Misc. Parts *13*
3.3.6 RGB24 Initial Testing / Final Assembly *15*
3.3.7 Install the ICs: *16*
3.4 DCSSR ASSEMBLY GUIDE 17
3.4.1 Install Parts Group 1 and 2 ..... *17*

4. FINAL STEPS **22**

4.1 PROGRAMMING THE PIC 22
4.2 RGB24 JUMPER SETTINGS / HEADERS 22
4.2.1 JP1 XBee Header *22*
4.2.2 JP2 PIC Bypass *22*
4.2.3 JP3 RS485 Terminator *23*
4.2.4 Programming- ICSP Header *23*
4.3 CONNECTING THE RENARD TO YOUR PC 24
4.3.1 RJ45 Wiring *24*
4.3.1 DMX wiring *24*
4.3.2 Computer Setup *25*
4.4 FINAL TESTING 25
4.4.1 Diagnostic LED Status Lights *25*
4.4.2 Test Procedure *25*

5. PARTS PLACEMENT DIAGRAM **26**

5.1 RGB24 26
5.2 DCSSR 27

6. NOTES **28**

1. Introduction to Renard

Renard is the name of a “do-it-yourself” (DIY), computer-controlled, PIC-based dimmer light control concept. It also refers to a family of dimming controllers that have been designed and built based on this concept.

The Renard design concept was originally described by Phil Short in the Simple PIC-Based 8-Port Dimmer 'How-To' on the http://computerchristmas.com website. Since then there have been many enhancements and new designs based on this hardware. There have been many contributors to advancing Renard technology including M. Macmillan, D. Davis, P. Rogers, T. Straub, D. Haberle, A. Williams and others

Renard controllers typically rely on a separate computer running a light sequencing program to send it real-time sequences of controller commands to sequence the lights. The computer communicates with the Renard via RS232, RS485, or wireless (depending on the design) and the Renard controls the lights either through built-in power control (power is output directly to the lights), or via separate “SSRs” (solid state relays supply the power when commanded by the controller).

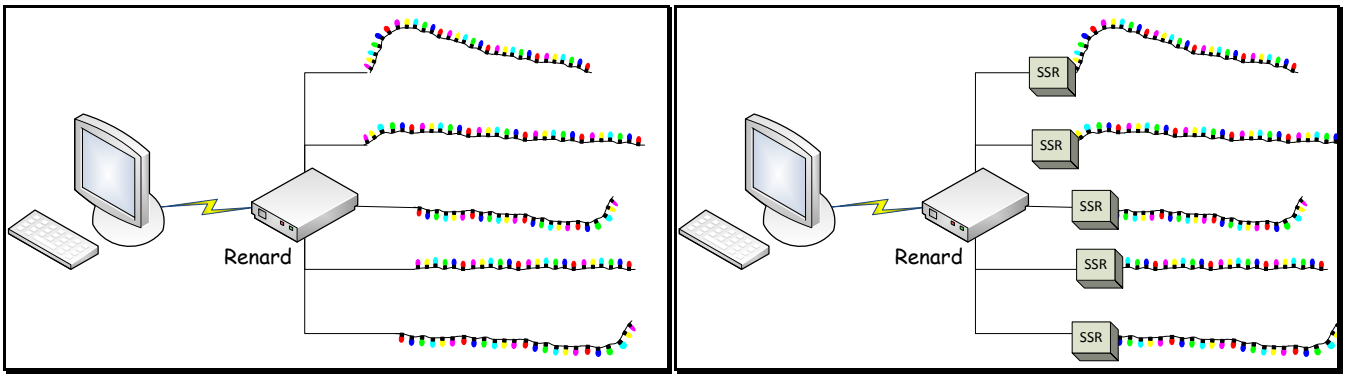

Example Renard configurations

Output of the Renard can be either control signals (to an SSR), direct AC line voltage (110, 100/220, or 220), or DC voltage depending on the design.

Renard is a DIY hobbyist effort and there is a vast amount of products and related peripherals to select from including the Renard Plus Strip Controller. To obtain a specific design, there might be “buy a parts kit and/or blank PCB” offering at a site (such as from www.renard-plus.com), “etch it yourself” files for true DIY, or coop/group buys for kits and PCBs also in forums (like DIYChristmas.org).

2. Overview of Renard Plus RGB24 and DCSSR

This guide covers the RGB24 and companion DCSSR. This combination is designed primarily to drive sets of red, green, and blue DC lights like LEDs or “low voltage” DC incandescent lights. The RGB24 is designed to drive an external solid state relay thus each of its RJ45 output connectors controls 3 channels of “RGB” SSRs such as the DCSSR which in turn will power 1 set of RGB lights for a total of 3 channels per DCSSR.

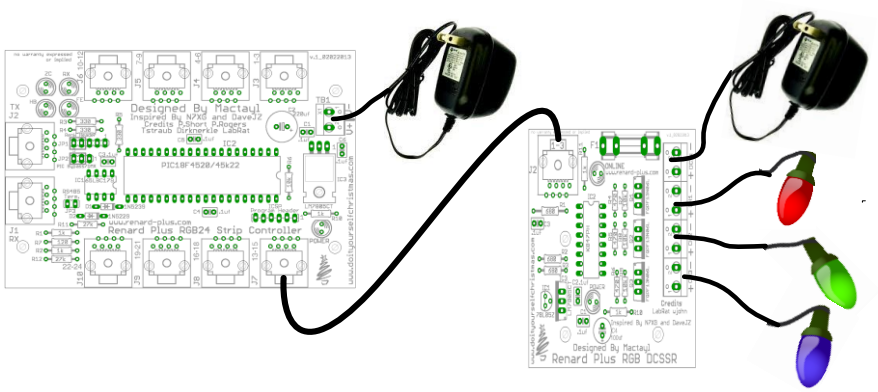

The RGB24 will control up to 8 DCSSRs for a total channel count of 24 channels (8 sets of RGB DC).

Feature	Detail
Name	**Renard Plus RGB24**
Target use	DC RGB Light control
Channel Count	24 (8 sets of RGB)
Power input	5-24v DC
Power output	No – controls SSR
Dimmable?	YES – PWM
Status Indicators?	YES
Channel Indicators?	NO
Control Input – Renard	YES – RS485 or optional wireless
Control Input – DMX	TBD
Daisy-chain output	YES – Renard RS485 pinout
Wireless	Option – w/add-on Xbee Snap-In board
On board programming	Yes through ICSP connector

Feature	Detail
Name	**Renard Plus DCSSR**
Target use	Companion to RGB24
Channel Count	3 (1 set of RGB)
Power input	5-24v DC
Power output	YES – DC
Dimmable?	YES – PWM
Status Indicators?	YES
Channel Indicators?	NO
Control Input – Renard	YES – Renard SSR pinout
Daisy-chain output	NO

3. Assembly Instructions

This section covers the construction of your Renard Plus Strip Controller RGB24 and DCSSRs. It approaches these tasks as a learning exercise for new builders, so that they can develop proficiency and self-confidence. The project itself is quite simple and if you follow the steps *carefully*, you should have a working controller when you are done. Additional information and guides on techniques and tools can be found at:
www.renard-plus.com/files/Tool_Selection_Guide.pdf

3.1 BOMs

3.1.1 RGB24 Parts List

The following is the Bill of Materials for the RGB24. This is the Mouser project link:
http://www.mouser.com/ProjectManager/ProjectDetail.aspx?AccessID=70b8220d67

Picture	Designators	Description	Qty	Mouser P/N
	R1, R2, R10	1k ohm resistor 1/4 watt	3	291-1k-RC
	R3, R4, R5	330 ohm resistor 1/4 watt	3	291-330-RC
	R6	10K ohm resistor 1/4 watt	1	291-10K-RC
	R7	120 ohm resistor 1/4 watt	1	291-120-RC
	R11, R12	27k ohm resistor 1/4 watt	2	291-27k-RC
	D1	1N5239 (9.1v) zener diode	1	78-1N5239B
	D2	1N5229 (4.3v) zener diode	1	78-1N5229B
	C1, C3, C4, C5, C6	.1uf cap	5	81-RDER71H104K0K103B
	C2	220uf 25V Electrolytic Cap	1	647-UHE1V221MPD
	TB1	Tyco Terminal Block vertical	1	571-7969492
	J1-J10	Modular Jacks 8 PCB TOP ENTRY	10	571-5556416-1
	IC1	IC & Component Sockets 40P	1	517-4840-6000-CP or 649-DILB40P223TLF
	IC2	8 pin IC socket (Optional)	1	517-4808-3004-CP
	IC3	6 pin IC Sockets (Optional)	1	571-1-390261-1
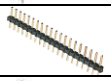	ICSP, JP1, JP2, JP3	16 pin header cut to fit: ICSP, JP1, JP2, JP3	1	571-16404526
		Shunts for JP1, JP2	3	649-63429-202LF
	IC4	LM7805CT voltage regulator	1	512-LM7805CT
	IC2	65LBC179	1	595-SN65LBC179P
	IC3	H11AA1	1	782-H11AA1
	IC1	PIC Microcontrollers (MCU) PIC18F4520 or 4620 and 4525	1	579-PIC18F4520-I/P
	Status	yellow 5 MM LED	1	78-TLHY5405
	Power, HB, ZC	Red 5 MM LED	3	78-TLHR5401
	RX	Green 5 MM LED	1	78-TLHG5401

3.1.2 DCSSR Parts List

The following is the Bill of Materials one DCSSR. This is the Mouser project link:
http://www.mouser.com/ProjectManager/ProjectDetail.aspx?AccessID=cab0aeb42e

Picture	Designators	Description	Qty	Mouser P/N
	R1, R2, R3	680 ohm resistor 1 / 4 watt	3	291-680-RC
	R4, R5, R6	470 ohm resistor 1 / 4 watt	3	291-470-RC
	R7, R8, R9	10K ohm resistor 1 / 4 watt	3	291-10k-RC
	R10, R11	1k ohm resistor 1 / 4 watt	2	291-1k-RC
	C4	100uf 35V Electrolytic Cap	1	647-UVR1V101MED1TA
	C1, C2, C3	.1uf cap	3	81-RDER71H104K0K103B
	DCIN, CH1, CH2, CH3	Tyco Terminal Block vertical	4	571-7969492
	J2	Modular Jacks 8 PCB TOP ENTRY	1	571-5556416-1
	IC2	16 pin IC socket (optional)	1	571-1-2199298-4
	IC1*	Low Current 5 volt voltage regulator*	1	512-LM78L05ACZX*
	IC3*	LM7805CT voltage regulator*	1	512-LM7805CT*
	IC2	K847PH optocoupler	1	782-K847PH
	Q1, Q2, Q3	Power FET	3	512-FQPF13N06L
	Power	Red 5 MM LED	3	78-TLHR5401
	Online	Green 5 MM LED	1	78-TLHG5401
	F1	Fuse Holder	2	534-3517
	F1	Fuse 10amp fast acting	1	504-GMA-10

* See assembly instructions. Use either IC1 ***or*** IC3: 5 volt regulator not both!

3.2 Controller Board Assembly

The Renard Plus RGB24 Strip Controller and DCSSR are simple devices to assemble and test. It is easiest if you build the units by inserting the various components from smallest to tallest.

3.2.1 First things first

1. Begin by inspecting the PCBs to look for any defects such as cracks or breaks. The holes on the board should be open on both sides.

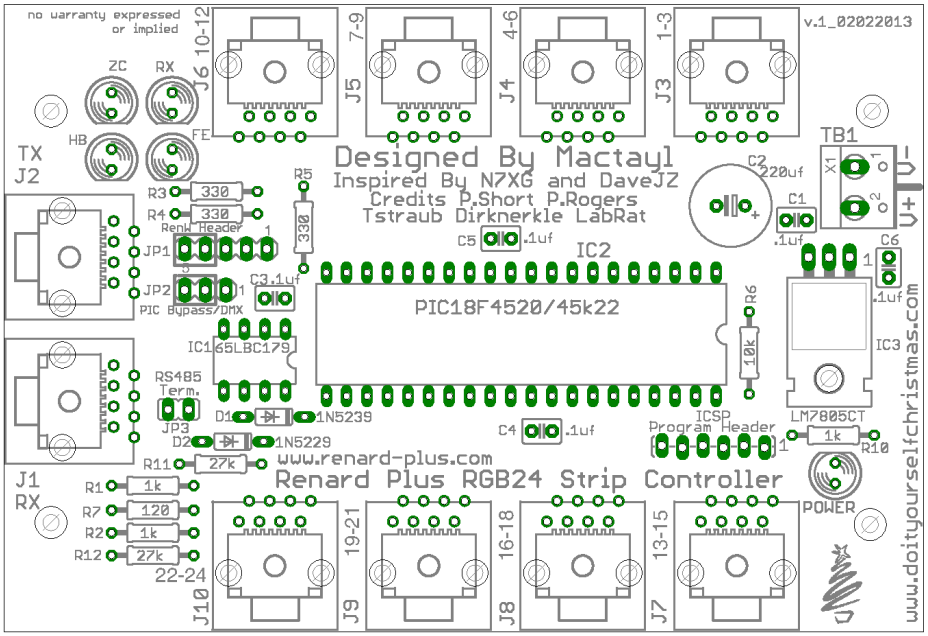

2. Next inspect and sort out the various parts for the board. Make sure you understand which parts are which, and things like resistor codes and component orientation. A separate document on these concepts is available at www.renard-plus.com/files/Tools_and_Parts_ID_Guide.pdf and on other resource sites like Wikipedia.

3. Follow the assembly guide as follows in the next section.

3.3 RGB24 Assembly Guide

3.3.1 Install the resistors and Diodes

Step	Instructions	RGB24
1 ☐	Install 1K (brown-black-red) ohm resistors at locations R1, R2, R10 Solder and clip the leads.	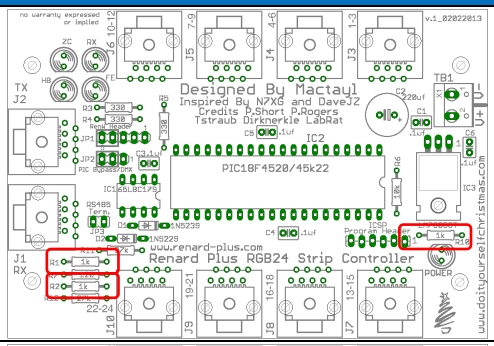
2 ☐	Install 330 (orange-orange-brown) ohm resistors at locations R3, R4, R5. Solder and clip the leads.	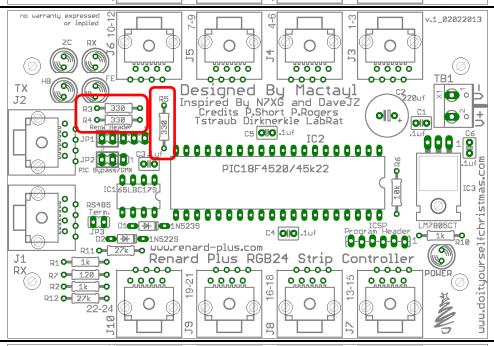
3 ☐	Install the 10K (brown-black-orange) ohm resistor at location R6. Solder and clip the leads.	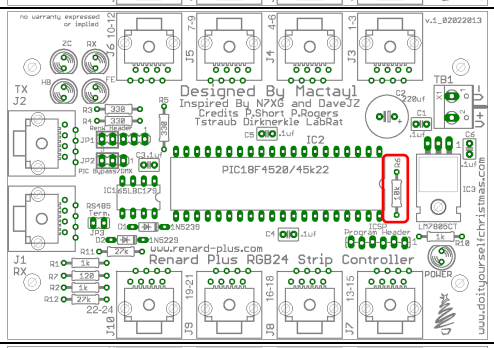
4 ☐	Install the 120 (brown-red-brown) ohm resistor at location R7. Solder and clip the leads.	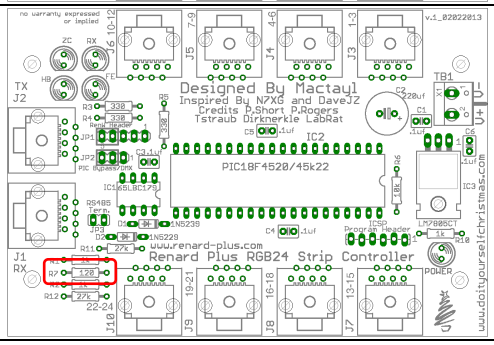

Step	Instructions	RGB24
5 ☐	Install 27K (red-violet-orange) ohm resistors at locations R11,R12. Solder and clip the leads.	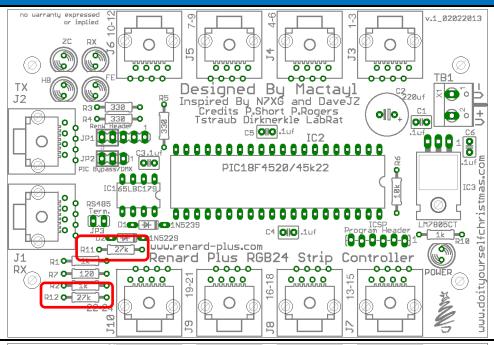
6 ☐	Install the 1N5239 diode at location D1. The diode is polarized and only works one way. The end with the band (cathode) goes towards the RIGHT side of the board (with your board oriented as shown) just as the silkscreen indicates. Solder and clip the leads.	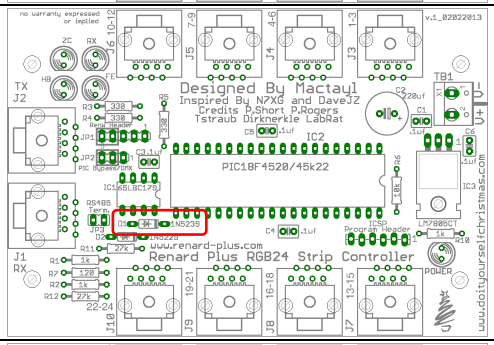 
7 ☐	Install the 1N5229 diode at location D2. The diode is polarized and it can only go one way. The end with the band (cathode) goes towards the RIGHT side of the board. Solder and clip the leads	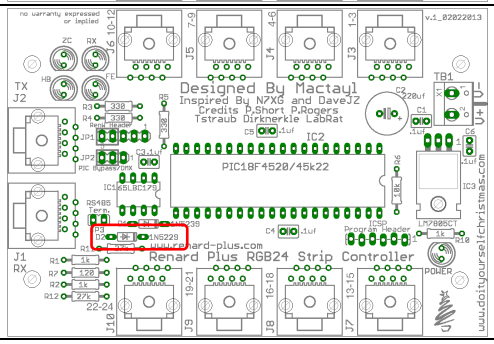

3.3.2 Install IC sockets

Even though these parts are optional we strongly recommend that sockets be used on all of the IC's.

> *Note: If you are not installing sockets, it is recommended you wait to install the ICs until AFTER you test power. Please see "Installing ICs" section later in this chapter.*

Pin 1 of the IC socket aligns to the square solder pad on the PCB. Also, if the socket has a notch at one end, that will align with the notch on the silkscreen for the IC location on the board. *See diagram below.*

Step	Instructions	RGB24
8 ☐	Install the 8 pin socket at location IC1. Make sure the notched or dimpled end is lined up with the notched end of the silk screen board outline. The notch on the socket should face the right side of the board. Solder one pin and make sure the socket is firmly seated before continuing to solder the remaining pins. Solder all pins.	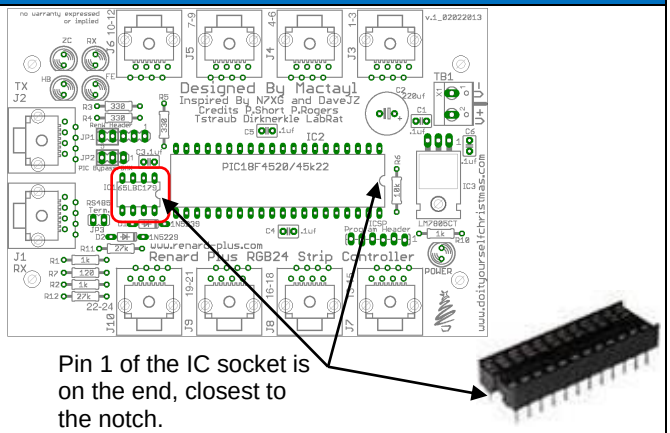
9 ☐	Install the 40 pin socket at location IC2. Make sure the notched or dimpled end is lined up with the notched end of the silk screen board outline. The notch on the socket should face the right side of the board. Solder one pin and make sure the socket is firmly seated before continuing to solder the remaining pins. Solder all pins.	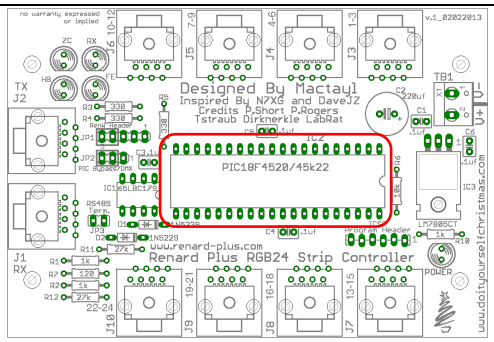

3.3.3 Install the capacitors

Some capacitors, like ceramic caps used for signal noise suppression, do not have a polarity and can be installed in either orientation.

Other caps, like electrolytic or tantalum caps used for voltage filtering and power droop suppression typically DO have an orientation and need to be installed carefully. Look for a stripe (white or black depending on the cap color), arrows, or polarity indicators (typically negative signs "-") indicating the polarity of the part.

This board uses both ceramic and electrolytic so please follow the installation instructions carefully.

Step	Instructions	RGB24
10 ☐	Install 0.1uf Ceramic Capacitors (marked 104) at locations C1, C3, C4, C5, C6. Solder and clip the leads. Note these parts are NOT polarized.	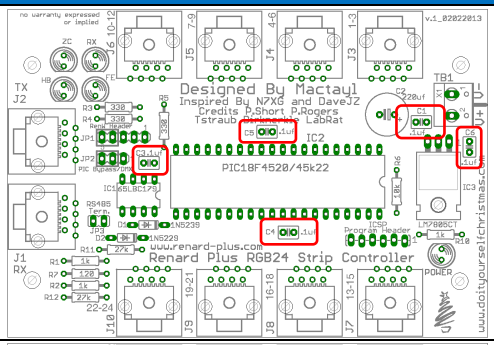
11 ☐	Install the 220uf Electrolytic Capacitor at location C2 which is polarized. Be sure that the (+) lead is installed in the hole marked with a "+" symbol. The (+) lead is usually longer than the (-) lead, and the (-) lead is typically identified by a black or white stripe or negative signs printed on the capacitor. Solder and clip the leads.	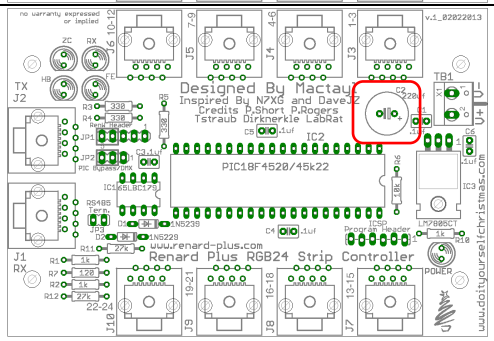 

3.3.4 Install the light emitting diodes

LED's (light emitting diodes) must be installed according to the silk screen pattern on the board. In looking at an LED you will notice a flat spot on one side of the LED which indicates the cathode or negative leg of the LED.

Step	Instructions	RGB24
12 ☐	Install the Red LEDs at the locations marked Power, HB, ZC. The LED is polarized. There is a flat side (cathode) that has a short lead and it faces towards the right side of the board. Solder and clip the leads.	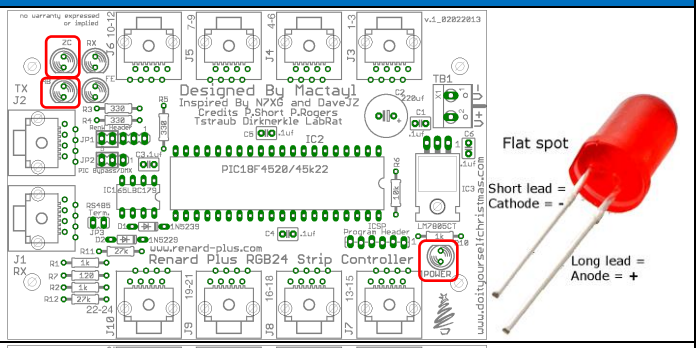
13 ☐	Install the Yellow LED at the location marked FE. The LED is polarized. There is a flat side (cathode) that has a short lead and it faces towards the right side of the board. Solder and clip the leads.	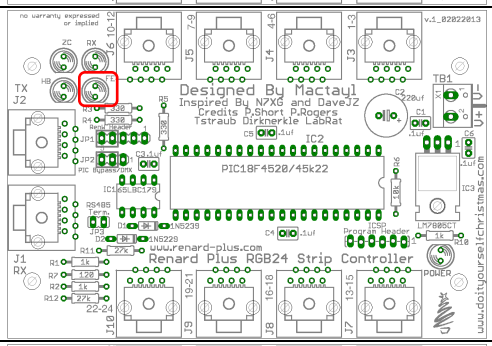
14 ☐	Install the Green LED at the location marked RX. The LED is polarized. There is a flat side (cathode) that has a short lead and it faces towards the right side of the board. Solder and clip the leads.	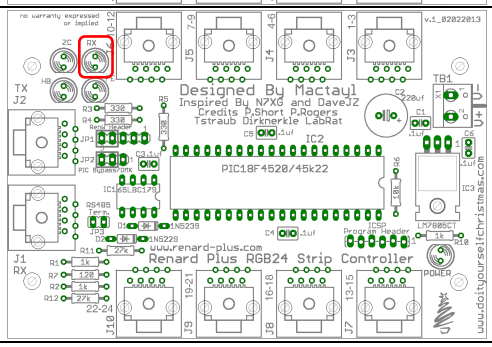

3.3.5 Install Misc. Parts

You may have purchased either a single 16 pin header or headers cut according to the board specifications. When installing headers the short side of the header is installed into the board.

Step	Instructions	RGB24
15 ☐	Install the 5 pin header at location JP1 (RENW header). Solder	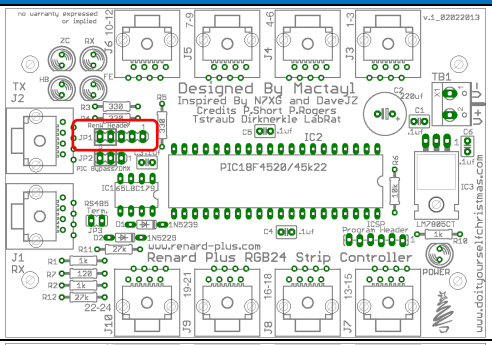
16 ☐	Install the 3 pin header at location JP2 (PIC bypass). Solder.	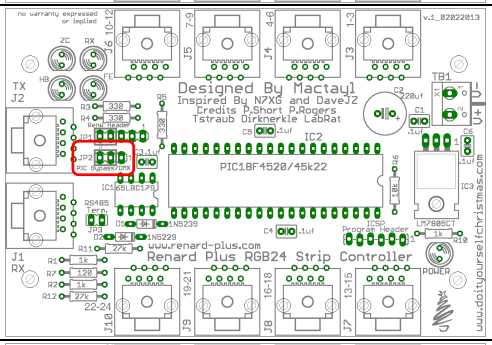
17 ☐	Install the 2 pin header at location JP3 (RS485 Term). Solder.	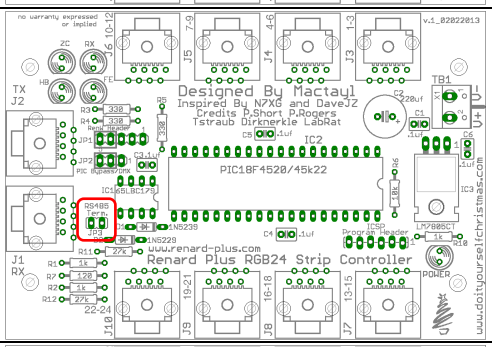
18 ☐	Install the 6 pin header at location ICSP (PIC programming header). Solder.	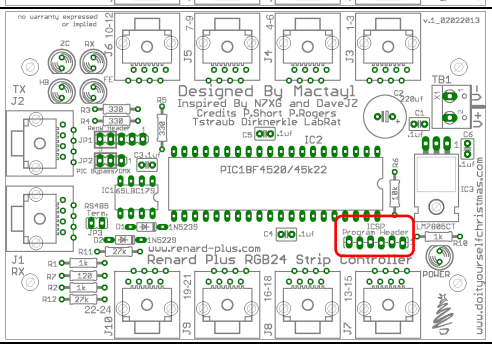

Step	Instructions	RGB24
19a ☐	**<u>7-24DC input option</u>** If the input voltage to the board on TB1 will be 7 to 24vDC please use this option. Install the 5v linear regulator at location IC3 forming the leads as indicated below. Fold the pins over the shaft of a small screwdriver to create smooth bends. Apply a layer of heat sink compound to the back of the regulator. After inserting the leads into the proper holes, secure the IC with a 4-40 bolt, #4 lock washer, and a 4-40 nut. Solder **--OR --**	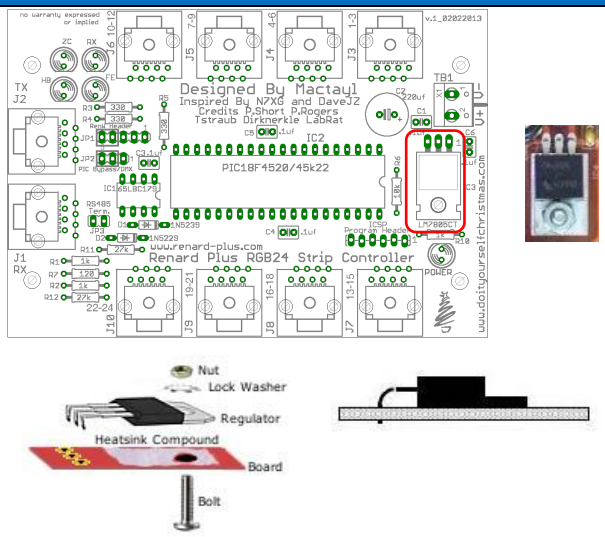
19b ☐	**<u>5V Only Option</u>** If your DC voltage input on TB1 will be a well regulated 5V DC, then follow this option. Omit the voltage regulator at IC3. Form a jumper to loop from IC3 pin 1 to pin 3 from a cut-off resistor or capacitor leg. Besure the jumper does NOT contact the center pin or any other components. Solder.	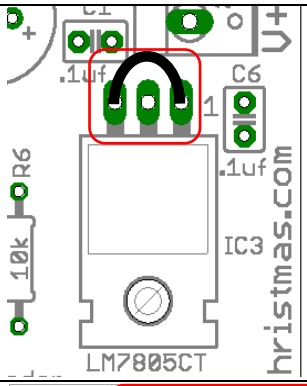
20 ☐	Install the RJ45 jacks at locations J1-10. Gently align the eight wires with the matching holes and snap the connector to the board. Solder.	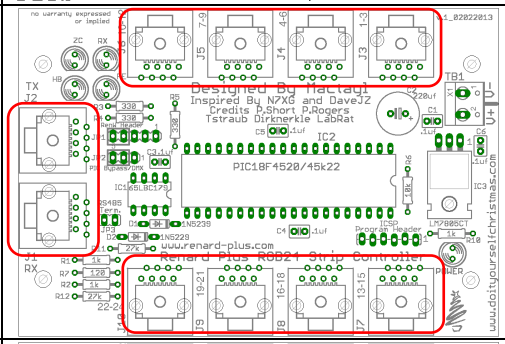
21 ☐	Install the 2 position terminal strip location TB1. The side where the wires enter under the screw should face the top of the board. *Note: This is where you will apply power for the controller board.*	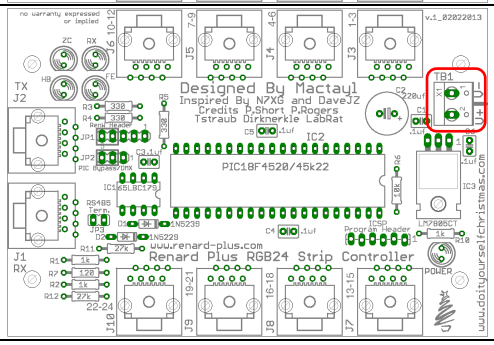
22 ☐	Install the shunts on the headers according to the Jumper Settings / Header Settings section in a following chapter.	

3.3.6 RGB24 Initial Testing / Final Assembly

At this point you have completed the assembly of the board and you should gently clean the board of any residue and inspect for solder bridges. What you are looking for are any solder bridges especially around the IC's and other closely spaced parts.

Connect your 5-24vdc power supply to the TB1 terminal strip noting the polarity V+ and V-. It supplies power to the controller portion of the board.

Turn on your power supply and verify the power LED lights up.

Using a DMM, verify you have 5v DC (4.85 to 5.15 or so) between pins 1 and 4 on the 485 chip socket as well as between pins 11 (+5) and 12 (GND) on the PIC socket.

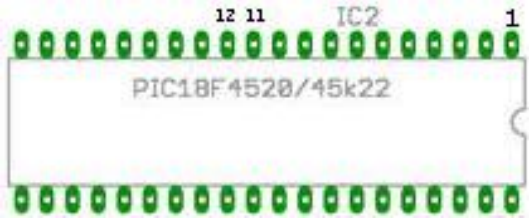

If the voltage does NOT measure near +5, remove power and start troubleshooting. Look for solder bridges around the regulator, or around the TB1. Double check the regulator number to make sure it is what you expect (something like LM7805 or LM340T-5). Verify the input power supply is DC between 7v and 24v DC (measure at TB1). If you are inputting 5V DC, be sure you did NOT install the regulator but instead followed the "5V Only" option in the assembly instructions.

If power is good, turn off your power supply and continue assembling.

3.3.7 Install the ICs:

After verifying the voltage, it is now safe to install the IC's. You should handle them carefully, and avoid static electricity or other rough handling. Try to avoid bending pins when inserting them in the sockets. You might want to slightly straighten the IC legs by placing the side of the IC against a flat surface and lightly bending them inward and straighter up and down than they typically are shipped from the manufacturer.

Step	Instructions	RGB24
23 ☐	Install the PIC18F4520 in the 40 pin socket at location IC2. The IC is polarized. Gently install the IC so that the notch faces towards the right matching the socket and the silkscreen.	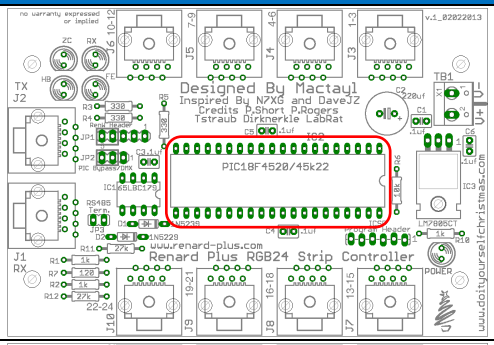
24 ☐	Install the SN65LBC179P in the 8 pin socket at location IC1. The IC is polarized. Gently install the IC so that the notch faces towards the right matching the socket and the silkscreen.	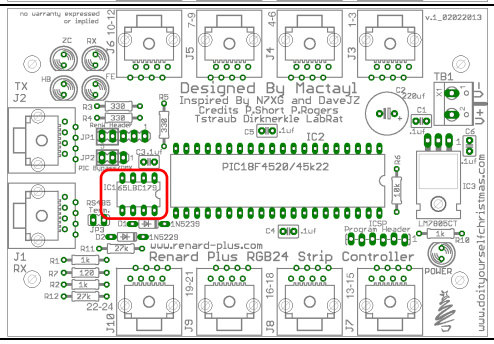

3.4 DCSSR Assembly Guide

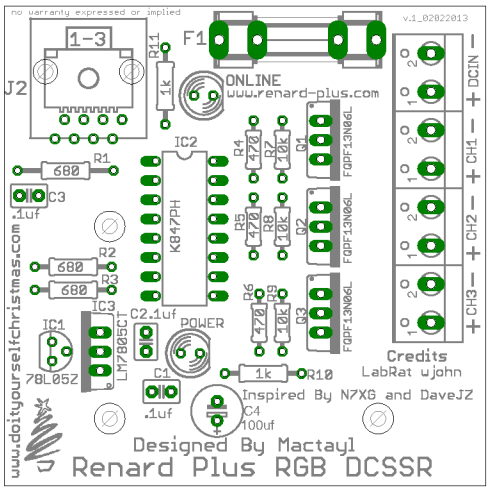

3.4.1 Install Parts Group 1 and 2

Step	Instructions	DCSSR
1 ☐	Install 680 (blue-gray-brown) ohm resistors at locations R1, R2, R3. Solder and clip the leads.	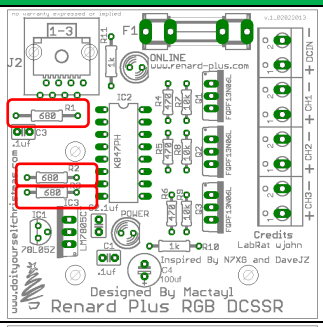
2 ☐	Install 470 (yellow-violet-brown) ohm resistors at locations R4, R5, R6. Solder and clip the leads.	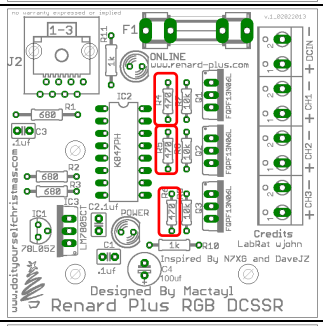
3 ☐	Install 10K (brown-black-orange) ohm resistors at locations R7, R8, R9. Solder and clip the leads.	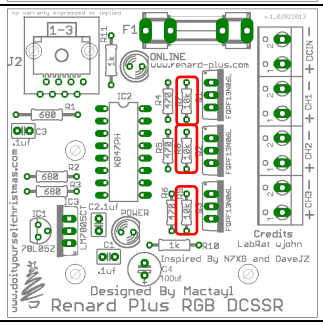

Step	Instructions	DCSSR
4 ☐	Install 1K (brown-black-red) ohm resistors at locations R10, R11. Solder and clip the leads.	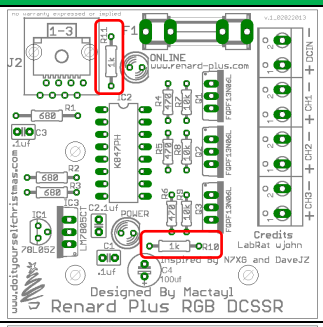
5 ☐	Install 0.1uf Ceramic Capacitors (marked 104) at locations C1, C3, C4. Solder and clip the leads. *Note: These parts do NOT have a specific orientation.*	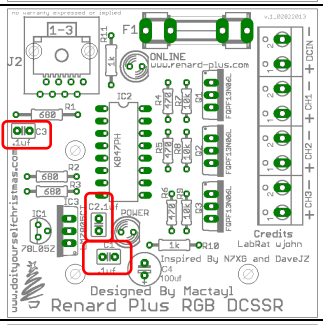
6 ☐	Install the 100uf Electrolytic Capacitor at location C4 which is polarized. Be sure that the (+) lead is installed in the hole marked with a "+" symbol. The (+) lead is usually longer than the (-) lead, and the (-) lead is typically identified by a black or white stripe and/or negative signs printed on the capacitor. Solder and clip the leads.	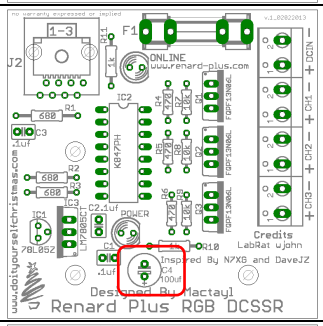
7 ☐	Install the 16 pin socket at location IC2. (***see instructions***) Make sure the notched or dimpled end is lined up with the notched end of the silk screen board outline. The notch on the socket should face the right side of the board. Solder one pin and make sure the socket is firmly seated before continuing to solder the remaining pins. Solder all pins.	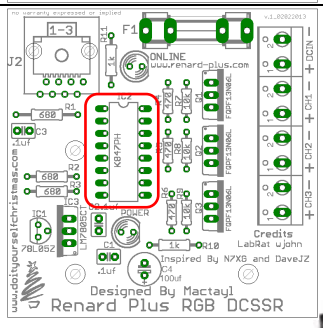 Pin 1 of the IC socket is on the end, closest to the notch.
8 ☐	Install the Red LED at the location marked Power. The LED is polarized. There is a flat side (cathode) that has a short lead and it faces towards the right side of the board. Solder and clip the leads.	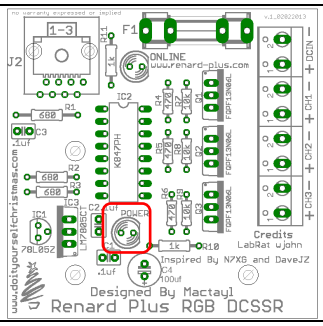 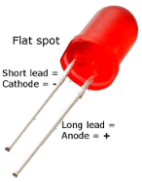

Step	Instructions	DCSSR
9 ☐	Install the Green LED at the location marked Online. The LED is polarized. There is a flat side (cathode) that has a short lead and it faces towards the right side of the board. Solder and clip the leads.	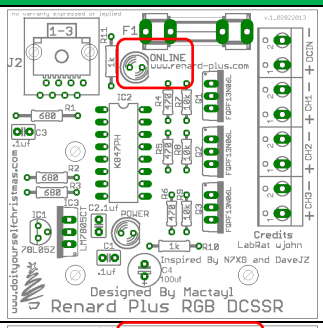
10 ☐	Install fuse holder at location F1. The clips have dimples on one side of then and these must be facing towards the sides of the board and not the center. Solder. Install the fuse into the fuse holder. The fuse does not get soldered. *Note: The fuses can be used to align the fuse clips for soldering as long as you do not overheat them.* 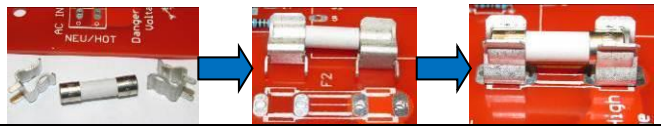	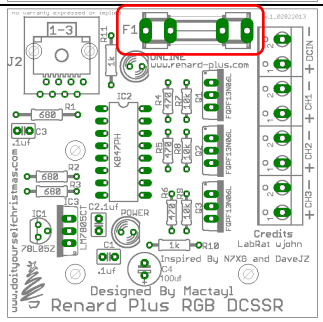
11 ☐	Install the RJ45 jack at locations J2. Gently align the eight wires with the matching holes and snap the connector to the board. Solder all pins.	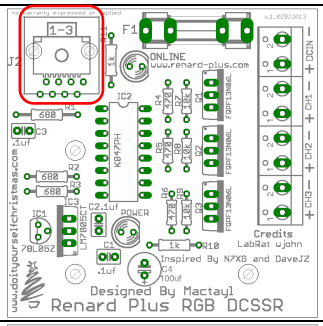
12 ☐	Install 4 terminal blocks at locations CH3, CH2, CH1, and DCIN. Before installing in board the 4 terminal blocks must be locked together. *Note: The terminal blocks must be oriented facing outward.*	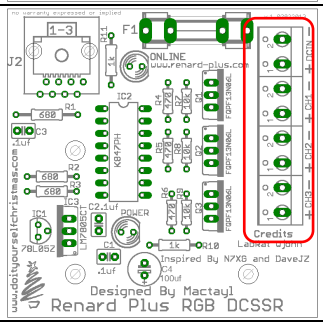

Step	Instructions	DCSSR
13 ☐	Install the K847PH optocoupler into socket at location IC2. The IC is polarized. Gently install the IC so that the notch lines up with notch in the 16 pin socket.	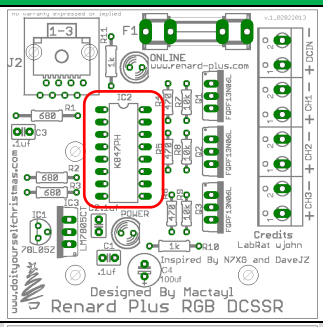
14a ☐ Low Current Option	The DCSSR may either built for low current or high current strips. Select either this option or the next but **<u>NOT</u> BOTH!** **<u>For Low Current option</u>** - Install LM78L05 (low current) at location IC1. The LM78L05 is installed with the flat side if the IC toward the side of the board. Solder and clip leads.	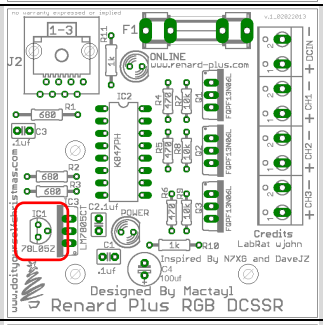
14b ☐ High Current Option	**<u>For High Current option</u>** - Install LM7805CT at location IC3. The LM7805 is installed with the tab side toward the side of the board. Solder and clip leads.	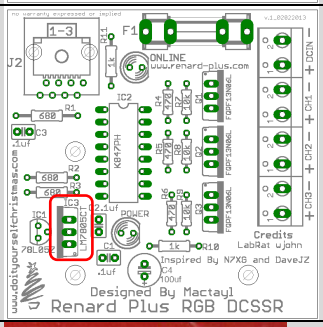
14c ☐ 5V Only Option	**<u>For 5V Operation</u>** – If you will be applying ONLY 5v in to the board on the DCIN connector, you can omit both voltage regulators at IC1 and IC3 and place a jumper across IC1 as shown. *Note: With this option <u>ONLY</u> apply 5V DC to DCIN! Other voltages are very likely to cause damage.*	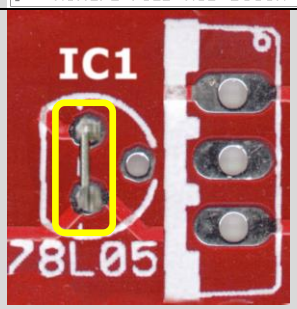
15 ☐	Install the FQPF13N06L power FETs at location Q1, Q2, Q3. The FETs should be installed with the tabs facing the terminal blocks. Solder and clip the leads.	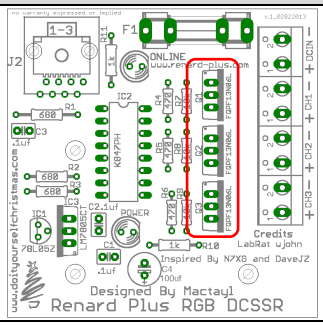


ONLINE
POWER
Credits
Renard
PLUS
RGB DCSSR
www.renard-plus.com

4. Final Steps

At this point you will have now completed the installation of all of the parts to the controllers. Again, it is a good idea to visually inspect the board and check to make sure there are no solder bridges between the solder pads, and that the solder joints are all a good quality.

4.1 Programming the PIC

Note: The Renard Plus LCC16 does not use the default Renard firmware used on other Renard devices. Make sure you use the Renard Plus version of the code!

Programming the PIC can be done with the PIC chip plugged into a PIC programmer such as the PICStart from MicroChip or onboard using a programmer like a PicketIII or PicKit2. Programming PIC's using standard assembly is written up in our PIC Programming Manual available on www.renard-plus.com.

4.2 RGB24 Jumper Settings / Headers

4.2.1 JP1 XBee Header

This header can be used to connect a XBee Wireless module directly to the Renard Plus Strip using a Xbee Snap-in board or indirectly using 3 wires to a board such as the REN-W. If you are not using XBee Wireless then you must jumper pins 4/5 using a shunt jumper. The following are the pinouts for the Xbee header:

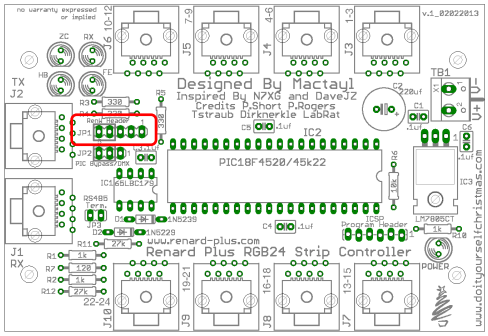

Pin Layout

1 = +5VDC
2 = N/C
3 = GND
4 = RX from 485 chip
5 = RX in to PIC

Option - Xbee using Snapin Board

Note: When assembling the DIGWDF Xbee SnapIn board (http://diychristmas.org/store/) install the female 5 pin header block on the bottom side of the board. Once assembled the SnapIn board can only be plugged in one direction.

4.2.2 JP2 PIC Bypass

If you are using Start Address Programming, you can use the PIC bypass to allow the data to flow thru the Renard Plus Strip without the usual Renard "address eating". If you use a jumper across pins 1/2 then the data stream that comes into the device goes out exactly as it came in with no addresses consumed by the Renard Plus board. The default position is a jumper across pins 2/3.

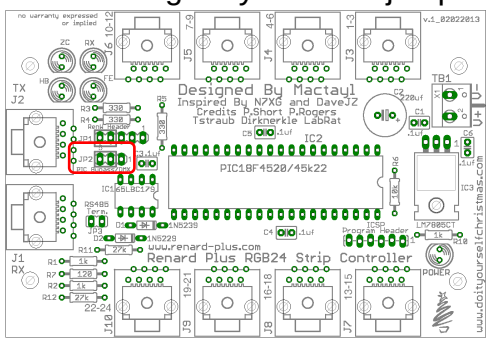

Pin Layout

1 = Data In From RS485 IC
2 = Data Out to RS485 IC
3 = Data Out from PIC

4.2.3 JP3 RS485 Terminator

There are situations where the communications from the computer might require termination. Usually line reflections or other environmental conditions can disrupt communications to the controller. You might see missed light transitions, jumpy animation, or complete no operation. In this case, adding termination *may* return reliable communications assuming everything else is working right. This jumper is usually only applies to the LAST board on a board to board chain of connections.

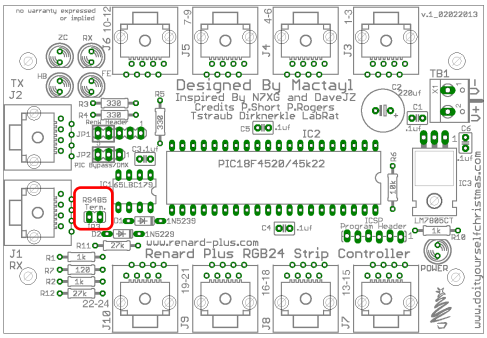

4.2.4 Programming- ICSP Header

This header allows the PIC to be programmed while the PIC is installed on the board

Pin Layout

Pin 1 = MCLR
Pin 2 = +5 volts
Pin 3 = GND
Pin 4 = PGD
Pin 5 = PGC
Pin 6 = PGM/RB5

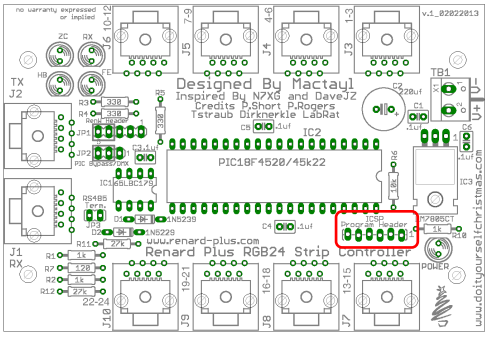

4.3 Connecting the Renard to your PC

This board has 2 RJ45 connectors that are used to receive data and pass data to the next controller.

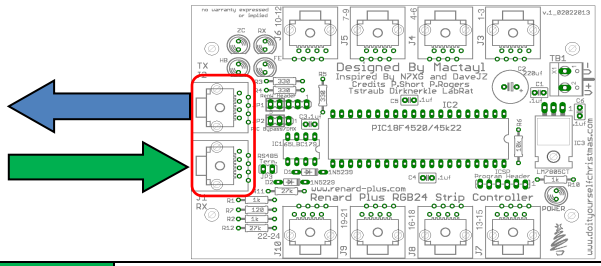

J1 RX	RS485 incoming data from either a RS485 converter or another controller
J2 TX	RS485 outgoing data to next controller

For RS232, TR8 FLEX J1 RX pin 4 connects to the serial TX pin (pin 3 of a DE9 female) and J1 pins 5 and 2 and/or 1 connect to serial GND (pin 5 of a DE9 female). For RS485 operation, J1 pins 1 and 2 are GND, pin 4 is Data-, and pin 5 is Data+ on the RS485. RS485 connections vary.

There are many options to connect your computer to the Renard Plus TR8 FLEX. Pictured here is the Renard Plus USB to RS485 adapter with an RJ45 output that connects directly to a Renard/Renard Plus controller with a standard Ethernet CAT5 cable. If selecting other RS485 adapters, look for ones that have a screw terminal to make your custom connection less difficult to handle.

4.3.1 RJ45 Wiring

A standard RJ45 networking cable can be used to connect the Renard to: ***1.*** Your PC Serial RS485 adapter, ***2.*** another Renard for daisy chain operation or, ***3.*** SSRs if your board requires the use of SSRs (like this board). The cable must be a straight thru style and NOT a cross-over type cable. Just check and make sure that the pins on one end of the cable connect to the same pin on the other end of the cable (the wire colors in the connector are a way to tell- look for the same color pattern on both connectors).

This is an example of a data cable wired to the EIA-568B standard. There are eight pins, numbered from left to right, looking at the jack.

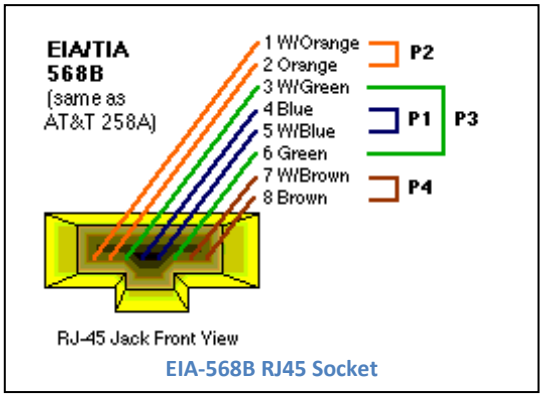

EIA-568B RJ45 Socket

4.3.1 DMX wiring

If you are using Renard Plus DMX firmware on your board, and will be using a "standard" DMX source, you may need to create a special interconnect cable, or adapter to get the DMX data into the correct pins on your Renard Plus. DMX adapters with an RJ45 output typically have data on pins 1(data+) & 2(data1) with GND on 7 or 8 of the connector, and Renards have data on pins 4 (data-) & 5(data+) with GND on pins 1 & 2. DMX configurations will vary so check carefully!

Signal	Renard RJ45	DMX RJ45
Data +	5	1
Data -	4	2
GND	1	8
GND	2	7

4.3.2 Computer Setup

If you are using the Vixen sequencing software to drive your Renard Plus, it will require either one of the following plugins:

- Renard Dimmer [Vixen 1.1.*]
- Renard Dimmer (modified) [Vixen 2.*]

If you are using Xbee wireless, the baud rate must be 57600.

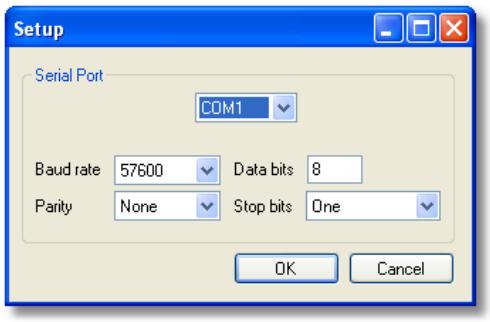

Suggested Renard Plug-In Settings

4.4 Final Testing

The Renard Plus Strip Controller has 5 diagnostic LED status lights which are used as follows.

4.4.1 Diagnostic LED Status Lights

For normal operation you should have the power LED lighted, ZC led active and the status LED blinking every few seconds (the PIC must be programmed). If you are running a sequence, you should see the FE led OFF, and the RX LED flashing.

PWR	**Power** - Will be on when power is applied.	
ZC	**ZC – "Zero Cross"** Will be on when the AC "zero cross" is detected.	
RX	**RX – "Receive"** Active when a sequence is running.	
HB	**HB – "Heart Beat"** Blinks every few seconds to indicate the microprocessor is active.	
FE	**FE** – "Framing Error" will light if the serial communication is incorrect. Typically this indicates a mismatch between the baud rate in the PIC firmware and the baud rate setting on the PC for the RS485 adapter.	

4.4.2 Test Procedure

The data wiring of the Renard Plus Strip Controller is the same as other Renard boards. Standard non-crossover CAT5 network cables can be used to connect to SSRs, other controllers, and/or the PC. Connect your Renard Plus to your PC using a standard CAT5 cable from the controller RX jack to a RS485 connection on your PC. Attach a SSR and one set of dimmable lights. Program a Vixen sequence to turn on/off each of the channels on the controller and run it. We would suggest that each channel is turned on for 4 or 5 seconds. Observe that the connected channel responds as programmed. Next, do a full load test by attaching the rest of the SSRs and lights and observe all lights are being controlled. Next, change the sequence from on/off to slow ramp up/downs to verify dimming.

Congratulations, with a successful test, you have completed your build of your Renard Plus controller and are ready for the wonderful world of light animation sequencing!

5. Parts Placement Diagram

5.1 RGB24

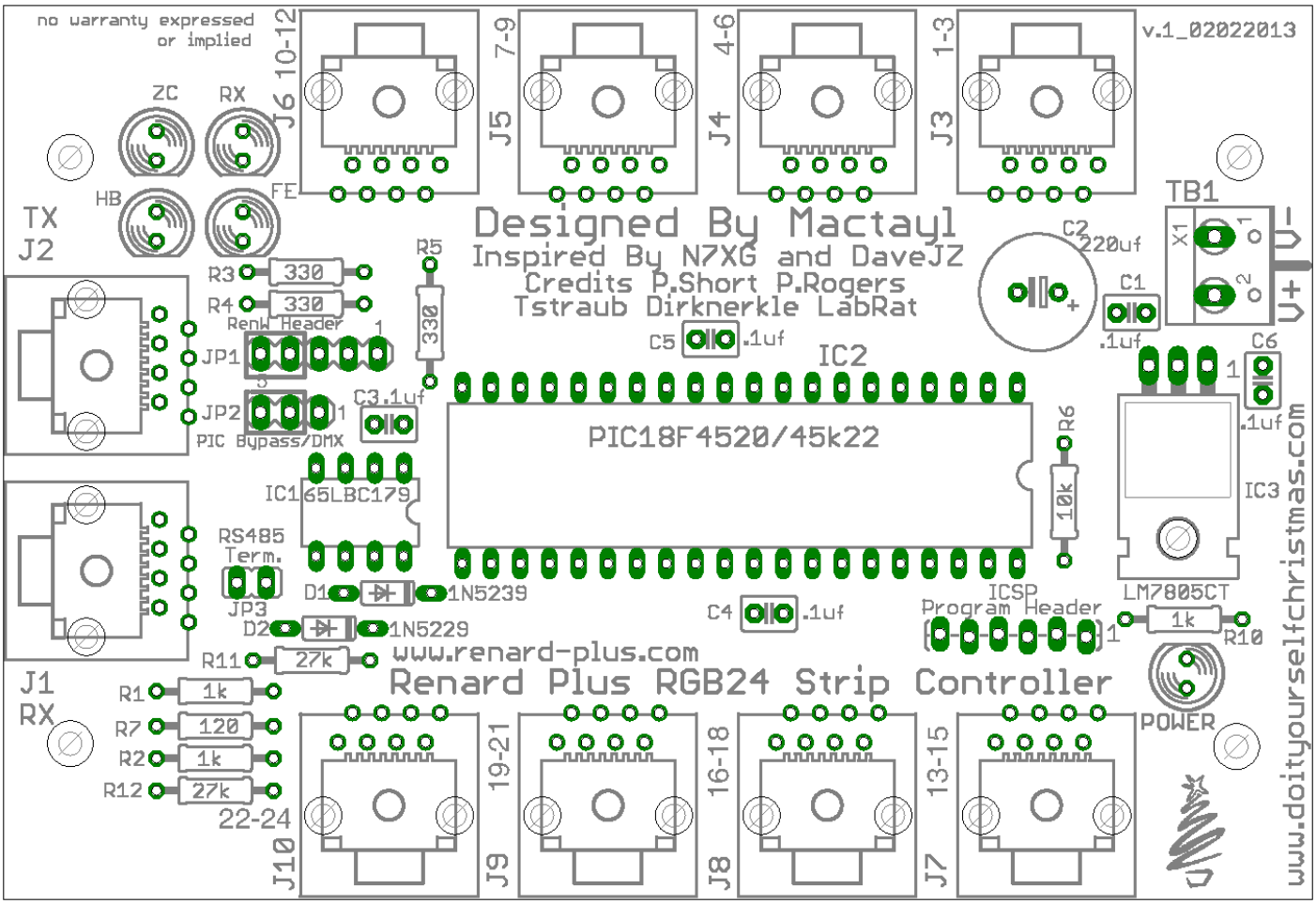

5.2 DCSSR

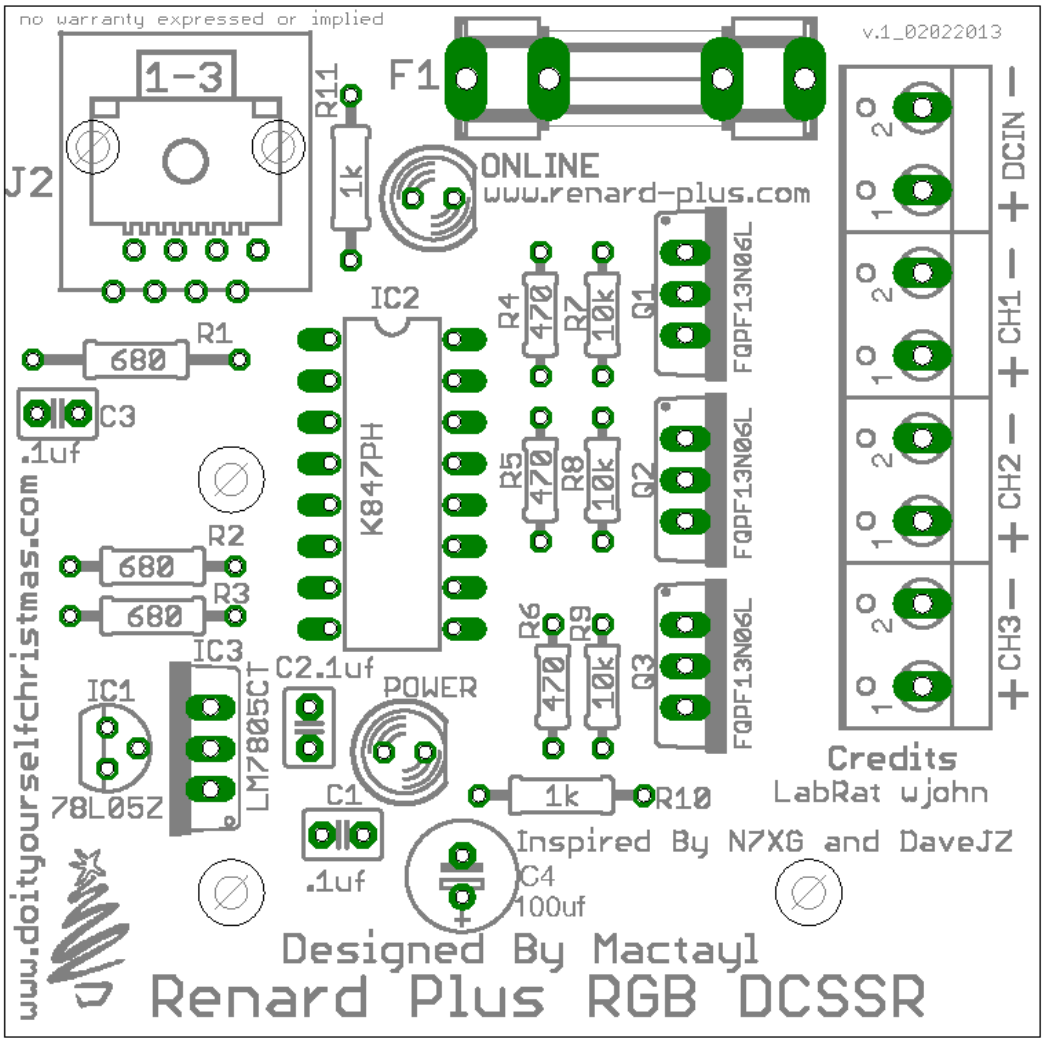
no warranty expressed or implied
v.1_02022013
1-3
J2
R11
1k
F1
ONLINE
www.renard-plus.com
IC2
K847PH
R1
680
C3
.1uf
R2
680
R3
680
IC3
LM7805CT
IC1
78L05Z
C2.1uf
POWER
C1
.1uf
R4
470
R7
10k
Q1
FQPF13N06L
R5
470
R8
10k
Q2
FQPF13N06L
R6
470
R9
10k
Q3
FQPF13N06L
1k
R10
C4
100uf
DCIN
CH1
CH2
CH3
Credits
LabRat wjohn
Inspired By N7XG and DaveJZ
Designed By Mactayl
Renard Plus RGB DCSSR
www.doityourselfchristmas.com

6. Notes

Use this page for notes about the boards.